Aero Design Ltd.

Work Order Control Sheet

Work Order#: 2017-37 **Date Opened:** 20 Feb 17 **Title:** Assembly

Aircraft OEM: Bell **Aircraft Model:** 205/212 **Product Type:** Cargo Basket **Product Model:** Mega **Quantity:** 1

Work Order Contents

	Initial or N/A
Work Order/Build Sheets (Procedures Provided)	JR
Additional Work Sheets (Standard Practice)	N/A
Drawings (See List Below)	JR
Parts Distribution Sheet	JR
Sub Component Tags	DB
Completed Certification (Original)	
Time Sheet (R&D)	N/A
Notes	N/A

Build Sheet Contents

	Initial or N/A
Tasks Initialled	
Dual Inspections Initialled	

Drawing List

Drawing #	Rev #	Description	Initial or N/A
100610	0	Basket	JC
100627	0	Placard	JC
84240	0	Lid Brace Install	JC
84255	2	Handle Install	JC

Traveller

	Initial or N/A
Install walkway on lid	DB
Install lid on basket body	DB
Re-tap mounting lug holes and install mount lugs	DB
Install handle brackets	DB
Install handle	DB
Install lid prop	DB
Install data plate	

Component Completion

	As Instructed
Quantity Complete on This Work Order	
Quantity Incomplete on This Work Order	
Further Processing Required Before Release	
Release to Stock as Components	

Certification

	Initial or N/A
Form One Completed	
Serviceable (Green) Tag Completed	
In Process (Yellow) Tag Completed	JC
Unserviceable (Red) Tag Completed	
Parts Placed in Stores for Distribution	

Additional Documentation

	Initial or N/A
Documentation of a minor change	N/A
Non-Conformance Report Required	N/A
Service Difficulty Report Required	N/A

Billing

	Initial or N/A
Local (Aero Design)	JR
Research and Development	N/A
Third Party	N/A

Work performed by:	Print: D. Bartfai	Sign:	SCA: AD07	Date: 24-Feb-17
ICC / Dual Inspection preformed by:	Print: J. CLARKE	Sign:	SCA: AD02	Date: 23 NOV 18
Work Order closed by:	Print: J. CLARKE	Sign:	SCA: AD02	Date: 26 NOV 18

Aero Design Ltd.

9888 A Malaspina Rd. Powell River, BC, V8A 0G3

Phone: 604-483-2376 Fax: 604-483-2372 E-mail: info@aerodesign.ca

AMF 73-04

Nomenclature: BASKET ASSY (205 MEGA) No. of pieces: 1

Manufacturer: AERO DESIGN LTD

Part No.: 100610-02 Serial/Batch No.: TBD

TTSN: N/A TSO: N/A Rem.: N/A

Work Order No.: 2017-37

Remaining Tasks to be Performed: INSPECT ✓

Signature: Jff Cah.

Date: 06 APR 2017 Lic. No. / SCA AD02

Form# 20.E.03 Rev. 1 24 April 2014

In Process

Aero Design Ltd.

9888 A Malaspina Rd. Powell River, BC, V8A 0G3

Phone: 604-483-2376 Fax: 604-483-2372 E-mail: info@aerodesign.ca

AMF 73-04

Remarks

In Process

Aero Design Ltd.
9888 A Malaspina Rd., Powell River, BC
V8A 0G3, 604-483-AERO (2376)

Quantity:	1		
PN:	Tread Plate		
Aircraft:	All	Model: N/A	
Description:	Lid Walkway Checker Plate		
Supplier:	Daigle Marine		
Color:	Aluminum		
WO#:	N/A	PO#	17011

Aero Design Ltd.
9888 A Malaspina Rd. Powell River, BC, V8A 0G3
Phone: 604-483-2376 Fax: 604-483-2372 E-mail: info@aerodesign.ca

AMF 73-04

Nomenclature: Mega basket handle No. of pieces: 1
Manufacturer: Aero Design Ltd.
Part No.: 84261-01 Serial No.: NA
TTSN: NA TSO: NA Rem.: NA
Work Order No.: 2017-31
Remaining Tasks to be Performed: Instal

Signature:
Date: Feb 23/2017 Lic. No. / SCA AD-05

Serviceable

Form# 20.E.02 Rev. 1 24 April 2014

Aero Design Ltd.

9888 A Malaspina Rd. Powell River, BC, V8A 0G3

Phone: 604-483-2376 Fax: 604-483-2372 E-mail: info@aerodesign.ca

AMF 73-04

Serviceable

Remarks

Aero Design Ltd.

9888 A Malaspina Rd. Powell River, BC, V8A 0G3

Phone: 604-483-2376 Fax: 604-483-2372 E-mail: info@aerodesign.ca

AMF 73-04

Nomenclature: BASKET BODY (MEGA) No. of pieces: 1

Manufacturer: AERO DESIGN LTD.

Part No.: 100611-01 Serial/Batch No.: NSN

TTSN: N/A TSO: N/A Rem.: N/A

Work Order No.: 2016-135

Remaining Tasks to be Performed: ~~CLEAN UP~~, INSPECT, POWDER COAT

NABC. VGC.

Signature: CCL.

Date: 28 OCT 2016 Lic. No. / SCA ADO2

In Process

Aero Design Ltd.

9888 A Malaspina Rd. Powell River, BC, V8A 0G3

Phone: 604-483-2376 Fax: 604-483-2372 E-mail: info@aerodesign.ca

AMF 73-04

In Process

Remarks

Aero Design Ltd.

9888 A Malaspina Rd. Powell River, BC, V8A 0G3

Phone: 604-483-2376 Fax: 604-483-2372 E-mail: info@aerodesign.ca

AMF 73-04

Nomenclature: EXT. LID (MEGA) No. of pieces: 1

Manufacturer: AERO DESIGN LTD

Part No.: 100613-01 Serial/Batch No.: NSN

TTSN: N/A TSO: N/A Rem.: N/A

Work Order No.: 2016-136

Remaining Tasks to be Performed: INSPECT, POWDER COAT

Signature: CCL.

Date: 28 OCT 2016 Lic. No. / SCA A002

Form# 20.E.03 Rev. 1 24 April 2014

In Process

Aero Design Ltd.

9888 A Malaspina Rd. Powell River, BC, V8A 0G3

Phone: 604-483-2376 Fax: 604-483-2372 E-mail: info@aerodesign.ca

AMF 73-04

In Process

Remarks

Work Order: 2017-37

Date Opened: 20 FEB 2017

Material Tracking Sheet
Bell 205/212
Mega Basket Assembly - Extended Lid

Ass'y Step	Qty	Detail Drawing	Part Number	Description	Material	PO/WO
	1		100610-02	**Cargo Basket Assembly - Extended Lid**		
Step 1				*Lid Assembly*		
	. 1		100613-01	Basket Lid Assembly		2016-136
Step 1.a.	. . 5		49205-14	Bumper	Argus Industries Bumper	15025
	. . A/R		--	Sealant	Commercial Silicone RTV sealant	
Step 1.b.	. . 1		100627-01	Placard	6061-T6 Aluminum, 0.050 Sheet	2015-03
	. . 1		--	Tread Plate (5.9 x 108.6)	3003 Aluminum Tread Plate, 0.063"	17011
	. . A/R		CR3213-4-02	Cherry Rivet		16053
	. . A/R		--	Sealant	Commercial Silicone RTV sealant	
Step 2				*Basket Assembly*		
Step 2.a.	. 1		100611-01	Basket Body Assembly		2016-135
	. . 4		96710-01	Fitting	Alternate: Ancra 40088-14	15075
	. . 8		NAS1149F0663P	Washer		16042
	. . 1		100616-01	Filler Sheet	6061-T6 Aluminum, 0.050 Sheet	16003
	. . A/R		CR3213-4-02	Cherry Rivet		16053
Step 3				*Hinge Installation*		
	. 1		MS20001P4	Piano Hinge	107"	15069
	. 4		CR3523-5-02	Cherry Rivet		16063
	. 4		CR3523-5-03	Cherry Rivet		15031
	. A/R		CR3213-5-02	Cherry Rivet		16053
	. A/R		CR3213-5-03	Cherry Rivet		14084
Step 4	. 2	84255	84255-01	*Handle Installation*		
Step 4.a.	. . 4		84267-01	Bracket	Delrin, ¾" Sheet	2016-37
	. . 8		AN3-11A	Bolt		14068
	. . 16		NAS1149F0363P	Washer		16042
	. . 8		MS21044N3	Nut		16080

Work Order: 2017-37

Date Opened: 20 FEB 2017

Material Tracking Sheet
Bell 205/212
Mega Basket Assembly - Extended Lid

Ass'y Step	Qty	Detail Drawing	Part Number	Description	Material	PO/WO
Step 4.b.	. . 1		84261-01	Handle Assembly		2016-146
	. . 2		36278-01	Spring (1 left, 1 right)	304 Stainless, 1/16" Dia Music Wire	15071
	. . 2		36275-01	Bushing	Brass, 5/16" Dia	2016-132
	. . 2		AN3-12A	Bolt		15031
	. . 4		NAS1149F0363P	Washer		16042
	. . 2		MS21044N3	Nut		16080
Step 5			*84240-01*	*Lid Brace Installation*		
	. 1		36280-01	Brace Assembly		2017-38
	. 1		AN3-15A	Bolt		14084
	. 1		AN3-17A	Bolt		13084
	. 2		AN970-3	Washer		15014
	. 3		NAS1149F0363P	Washer		16042
	. 2		MS21044N3	Nut		16080
Step 6				*Inspection*	*None*	

THIS DRAWING CONTAINS INFORMATION AND DATA WHICH IS PROPRIETARY TO AERO DESIGN LTD. THIS DRAWING, OR ANY PORTION THEREOF, MAY NOT BE REPRODUCED, COPIED, OR DUPLICATED IN ANY MANNER, NOR USED FOR ANY PURPOSE WITHOUT THE WRITTEN CONSENT OF AERO DESIGN LTD. BY ACCEPTING THIS DRAWING FOR REVIEWING, THE RECIPIENT AGREES TO HOLD AERO DESIGN LTD. HARMLESS FROM THE USE, OR MISUSE, OF THE DRAWING OR THE INFORMATION CONTAINED THEREIN.

REV	DESCRIPTION OF CHANGE	INITIALS	DATE
0	INITIAL ISSUE		

NOTES:
1. REMOVE ALL BURRS AND BREAK SHARP EDGES
2. PRIOR TO WELDING, DRILL ø30 (0.120) VENT HOLES IN ASSEMBLY FOR VENTING OF WELD GASES. WHEN ASSEMBLY IS COMPLETE FILL ALL EXPOSED VENT HOLES WITH ROSETTE WELD
3. WELDING OF 4130 STEEL TO BE COMPLETED BY GTAW METHOD TO AWS 2685C
   4130 AND 1018 STEEL WELDING ROD SHALL CONFORM TO ER70S-2 OR EQUIVALENT
   STAINLESS AND 4130 STEEL WELDING ROD SHALL CONFORM TO ER308L OR EQUIVALENT
4. INSTALL ITEM 13 (BASKET HANDLE PROVISIONS ASSEMBLY) IN ACCORDANCE WITH AERO DESIGN LTD DRAWING 84263 IN LOCATIONS SHOWN BEFORE WELDING HOOPS TO RAIL
5. FINISH THOROUGHLY CLEAN AND POWDER COAT BASKET ASSEMBLY

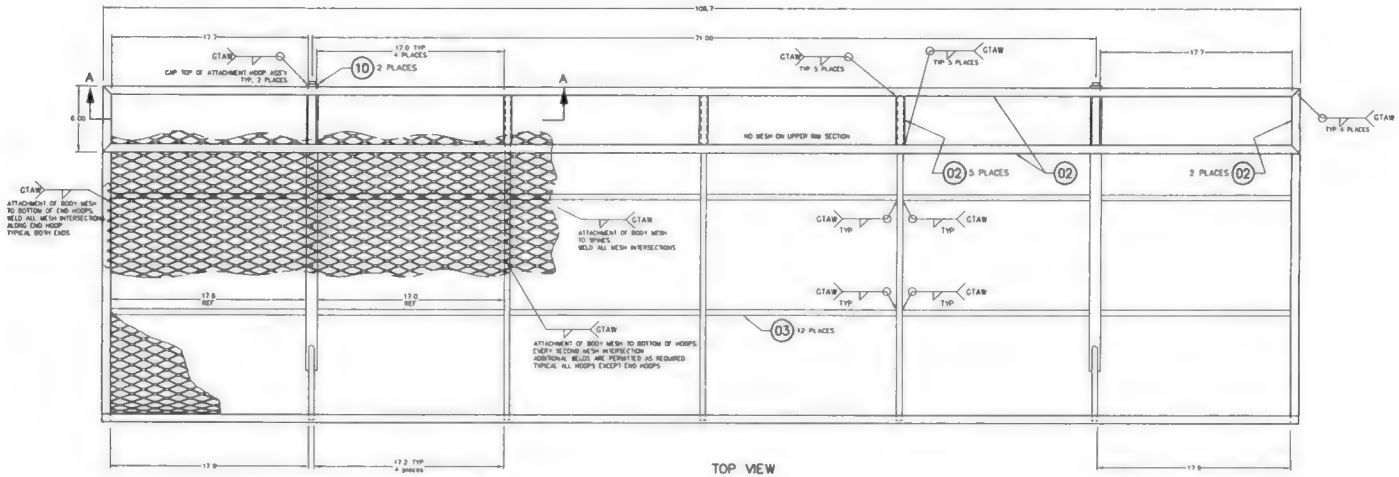

TOP VIEW

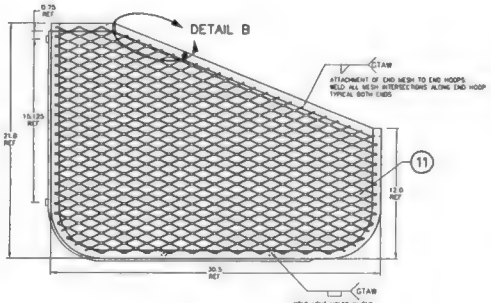

END VIEW
ENDS OPOSITE

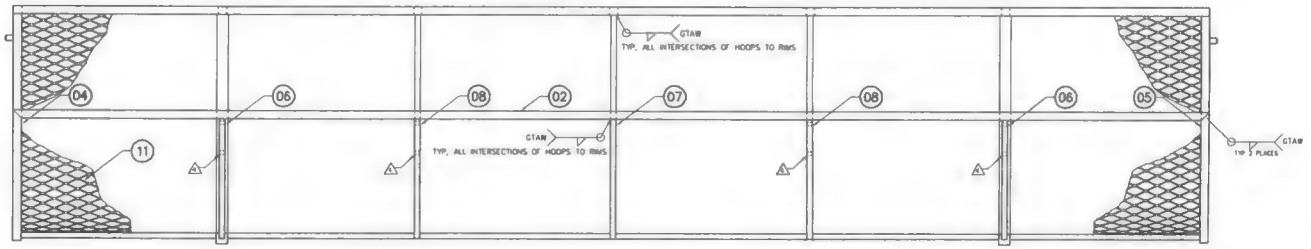

OUTBOARD SIDE VIEW
MESH NOT SHOWN FOR CLARITY

01 BASKET BODY ASSEMBLY

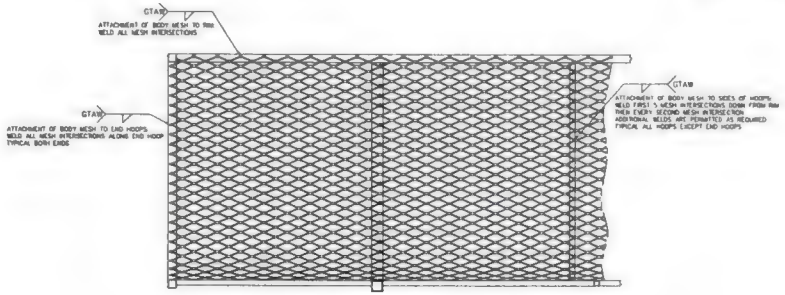

SECTION A–A
SCALE 1:4
VIEW LOOKING OUTBOARD

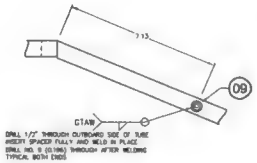

DETAIL B
SCALE 1:2
TYPICAL, BOTH ENDS

QTY	PART NO	ITEM	DESCRIPTION	MATERIAL	MATERIAL SPEC	STOCK SIZE
1	84263-01	13	BASKET HANDLE PROVISIONS ASSEMBLY			
A/R	3/4-16F	11	MESH	MILD STEEL	COMMERCIAL	
2	100611-10	10	CAP	MILD STEEL	ASTM 1010/1020	0.050 SHEET
2	48315-01	09	BUSHING			
2	100620-02	08	HOOP - WITH HANDLE PROV			
1	100620-01	07	HOOP			
2	100622-01	06	ATTACHMENT HOOP			
1	100621-02	05	RH END HOOP			
1	100621-01	04	LH END HOOP			
A/R		03	TUBE	4130 STEEL, COND. N	MIL-T-6736	0.5 x 0.035 SQR TUBE
A/R		02	TUBE	4130 STEEL, COND. N	MIL-T-6736	0.75 x 0.035 SQR TUBE
01	100611-01	01	BASKET BODY ASSEMBLY			

LIST OF MATERIALS

	APPROVALS	DATE
DRAWN	JEFF CLARKE	26 NOV 2014
CHECKED	JASON REEVE	27 NOV 2014

UNLESS OTHERWISE SPECIFIED
DIMENSIONS ARE IN INCHES
TOLERANCES ON:

DECIMALS	ANGLES
X.XXX ±0.010	±1/2°
X.XX ±0.03	
X.X ±0.1	

AERO DESIGN LTD.
8888A MALAMPUS ROAD
POWELL RIVER, BC CANADA V8A 0C3
TEL 604.483.8890
www.aerodesign.ca

BELL 205, 212, 214, 412 SERIES
QUICK RELEASE MEGA CARGO BASKET
BASKET BODY ASSEMBLY

SCALE 1:4	DWG SIZE	DWG NO	REV
SHEET 1 OF 1	A0	100611	0

THIS DRAWING CONTAINS INFORMATION AND DATA BASED & PROPRIETARY TO AERO DESIGN LTD. THIS DRAWING, OR ANY PORTION THEREOF, MAY NOT BE REPRODUCED, COPIED, OR DUPLICATED IN ANY MANNER, NOR USED FOR MANUFACTURING PURPOSES WITHOUT THE WRITTEN CONSENT OF AERO DESIGN LTD. BY ACCEPTING THIS DRAWING YOU AUTHORIZE THE RECIPIENT HEREIN TO HOLD AERO DESIGN LTD. HARMLESS FROM THE USE, OR MISUSE, OF THIS DRAWING OR THE INFORMATION CONTAINED THEREIN.

REV	DESCRIPTION OF CHANGE	INITIALS	DATE
0	INITIAL ISSUE		

NOTES

1. REMOVE ALL BURRS AND BREAK SHARP EDGES.
2. INSTALL RIVETS USING EDGE DISTANCE AND PITCH AS OUTLINED IN AC43.13-1B, PAR 4-38, FIG 4-3 AND FIG 4-6

⚠ INSTALL ADDITIONAL HANDLE BRACKETS IN LOCATIONS SHOWN IN ACCORDANCE WITH AERO DESIGN LTD. DRAWING B4255

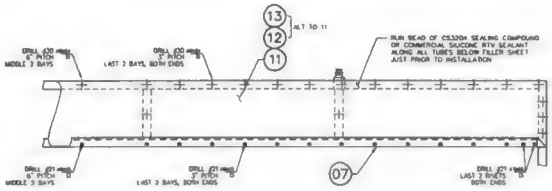

VIEW D

LOOKING DOWN AT INBOARD TOP RAIL PRIOR TO INSTALLATION OF LID

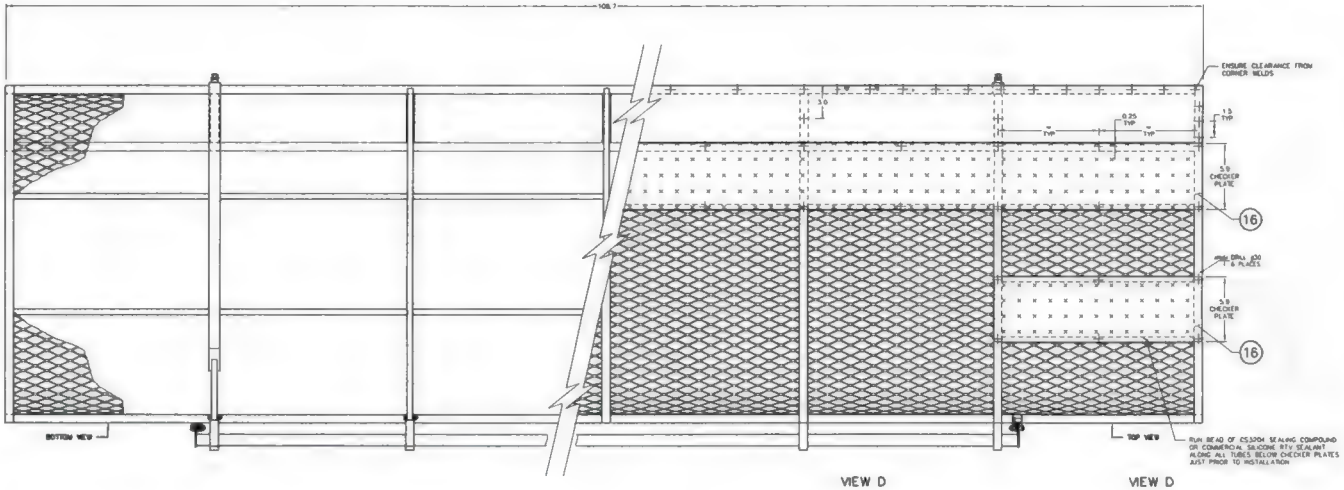

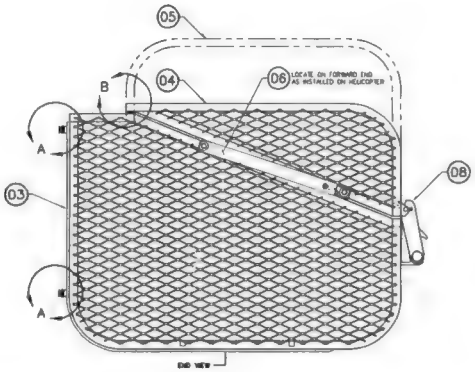

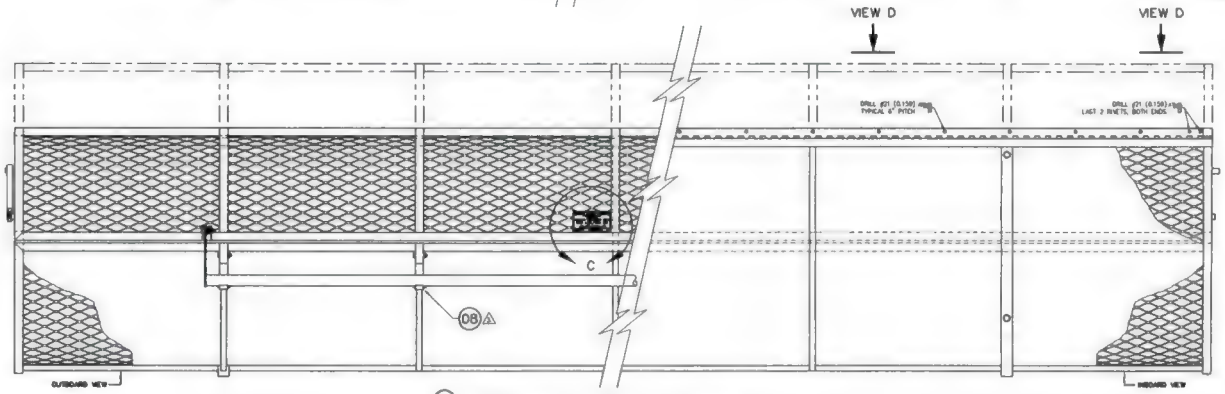

01 CARGO BASKET ASSEMBLY – STANDARD LID

02 CARGO BASKET ASSEMBLY – EXTENDED LID

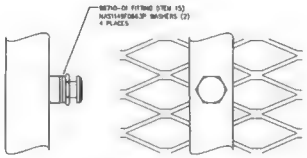

DETAIL A

SCALE : 1 : 1

LOOKING AT ATTACHMENT LUGS TYPICAL 4 PLACES

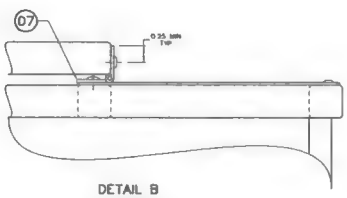

DETAIL B

SCALE : 1 : 1

LOOKING AT HINGE

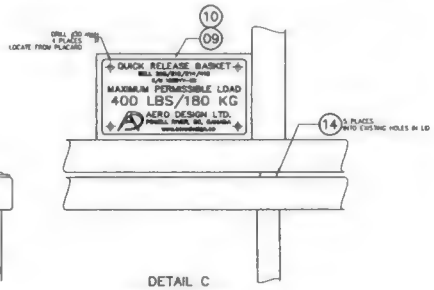

DETAIL C

SCALE : 1 : 1

LOOKING AT PLACARD BRACKET

A/R	A/R	-	SILICONE SEALANT (CLEAR)	COMMERCIAL		
A/R	A/R	CS3204	SEALING COMPOUND	AMS-C-8802C 12.81/2		
8	8	NAS1149F0863P	WASHER			
A/R	A/R	CR3213-4-02	CHERRYMAX RIVET	ALT HR3213-4-02		
4	4	CR3523-5-03	CHERRYMAX RIVET	ALT HR3523-5-03		
4	4	CR3523-5-02	CHERRYMAX RIVET	ALT HR3523-5-02		
A/R	A/R	CR3213-5-03	CHERRYMAX RIVET	ALT HR3213-5-03		
A/R	A/R	CR3213-5-02	CHERRYMAX RIVET	ALT HR3213-5-02		
A/R	A/R		16 CHECKER PLATE	3003 ALUMINUM	COMMERCIAL	0.063 SHEET, C-1102
4	4	96710-01	15 FITTING	ALT ANCRA 40088-14		
5	5	48205-14	14 BUMPER			
A/R	A/R	100616-03	13 AFT FILLER SHEET	(ALTERNATE TO 100616-01)		
A/R	A/R	100616-02	12 FORWARD FILLER SHEET	(ALTERNATE TO 100616-01)		
1	1	100614-01	11 FALLEN SHEET			
1	1	100627-02	10 PLACARD (EXTENDED LID)			
1	1	100627-01	09 PLACARD (STANDARD LID)			
1	1	B4255-01	08 HANDLE BAR INSTALLATION			
1	1	MS20000-P4	07 PIANO HINGE			107" LONG
1	1	B4240-01	06 BRACE INSTALLATION			
1	1	100613-01	05 LID ASSEMBLY (EXTENDED)			
1	1	100612-01	04 LID ASSEMBLY (STANDARD)			
1	1	100611-01	03 BASKET BODY ASSEMBLY			
		100610-02	02 CARGO BASKET ASSEMBLY -	EXTENDED LID		
		100610-01	01 CARGO BASKET ASSEMBLY -	STANDARD LID		
02	01	PART NO.	ITEM DESCRIPTION	MATERIAL	MATERIAL SPEC	STOCK SIZE
QTY	QTY			LIST OF MATERIALS		

	APPROVALS	DATE
DRAWN	JEFF CLARKE	26 NOV 2014
CHECKED	JASON REEVE	27 NOV 2014

UNLESS OTHERWISE SPECIFIED DIMENSIONS ARE IN INCHES
TOLERANCES ON:

DECIMALS	ANGLES
X.XXX ±0.010	±1/2°
X.XX ±0.03	
X.X ±0.1	

AERO DESIGN LTD.
8888A MACLEAN'S ROAD
POWELL RIVER, BC CANADA V8A 6G3
TEL 604.485.8279
www.aerodesign.ca

BELL 205, 212, 214, 412 SERIES
QUICK RELEASE MEGA CARGO BASKET
BASKET BODY ASSEMBLY

SCALE 1 : 4	DWG SIZE A0	DWG NO 100610	REV 0
SHEET 1 OF 1			

2017-37
Mega / Show

CARGO BASKET ASSEMBLY - COMMON

General

These instructions apply to all cargo basket assemblies. Refer to the following drawings, at the current revision, for dimensions and details:

Bell 206L/407 – Right side only
69810, Revision 3 – Standard Low Mounted Basket
94510, Revision 0 – Extra-Wide Low Mounted Basket
94610, Revision 0 – Extra-Wide Low Mounted Ski Basket
76610, Revision 0 – High Mounted Ski Basket

Eurocopter AS350/AS355 – left or right
77610, Revision 1 – Short Basket
76410, Revision 3 – Medium Basket (left or right)
78410, Revision 2 – Long Basket
94010, Revision 0 – Extra Large (ski) Basket

Robinson R44 – left or right
90610, Revision 0 – Standard Basket (left or right)

Bell 206B – right side only
80210, Revision 0 – Short Basket
80310, Revision 0 – Medium Basket
81110, Revision 0 – Long Basket

Bell 429 – right or left
95911, Revision 0 – Standard Basket

Bell Medium – left or right
75111, Revision 0 – Standard Basket
95511, Revision 0 – Extra Large (ski) Basket
Mega Basket ✓

MD600
82811, Revision 0 – Standard Basket

Options
70405, Revision 3? – Lid Walkway

Draft

CARGO BASKET ASSEMBLY - COMMON

Complete
(initial or SCA #)

Work Order: 2017-37

Date Open: 20 Feb 17

1. Lid Assembly — AD 73-04 01
    a. Install lid bumpers on bottom. — AD 73-04 01
        i. Fill bumper holes with RTV silicone sealant.
        ii. Insert 49205-14 lid bumper, 3 or 4 places per lid.

    b. Install placard on bracket on top of lid.
        i. Locate placard on bracket.
        ii. Drill #30 through placard and bracket, using holes in placard.
        iii. Remove placard and de-burr holes in placard and on bracket.
        iv. Locate placard on bracket, and cleco in place.
        v. Rivet placard with four CR3213-4-02 CherryMax rivets.

    c. Option: Install walkway on top of lid (lid must be fitted with walkway provisions)
        i. Note: avoid touching surface of tread plate with bare hands to prevent smudges or marks on the top surface.
        ii. Pull tread plate from stock. Shear tread plate to length.
        iii. De-burr edges of tread plate with scotch-brite disc on die-grinder.
        iv. Locate tread plate on lid. Hold tread plate in place with bags of lead shot.
        v. Mark and drill #30 holes:
            1. 0.25" from edge of tread plate, centre on cross members (0.38")
            2. 0.25" from edge of tread plate, middle of each walkway stringer
        vi. De-burr and counter-bore (if required to provide clearance of rivet head on checker pattern) all holes in tread plate using ¼" piloted counter bore on both sides.
        vii. De-burr holes in lid tubes.
        viii. Apply bead of RTV silicone sealant along all tubes under tread plate.
        ix. Set tread plate in place, secure with clecos if necessary.
        x. Rivet placard with CR3213-4-02 CherryMax rivets

    d. Record PO/WO of all parts (including lid) used in steps above on attached material tracking list.

2. Body Assembly — AD 73-04 01
    a. Install attachment fittings
        i. Carefully remove excess powder coat from around attachment lug threads using a countersink. — AD 73-04 01
        ii. Run 3/8-24 tap into attachment lugs to clear threads.
        iii. Apply anti-seize compound to attachment fittings 96710-01 (alternate: Ancra 40088-14)
        iv. Install attachment fittings with two NAS1149F0363P washers in four lugs in basket.
            1. 90610 (Robinson R44) basket only:
                a. Install 1 fitting 906?? in lower forward attachment lug only.
                b. Install 3 96710-01 fittings in remaining locations.
        v. Torque to ??

b. 946 Basket Only: Install Cutout Brace – *must be completed after hinge installation*
   i. Locate 94621-01 Brace over aft cross tube cutout
   ii. Install two AN4-6A bolts and two AN4-30A bolts with NAS1149F0463P washers.
   iii. Torque AN4 bolts to ??

c. Record PO/WO of all parts (including basket) used in steps above on attached material tracking list.

AO 73-04 07

3. Hinge Installation
   a. Prepare hinge.
      i. Cut hinge to length:
         1. 776, 906 – 54"
         2. 751, 803 – 70"
         3. 698, 764, 945 – 72"
         4. 784 – 90"
         5. 940, 946, 959 – 95"
      ii. Drill #30 pilot holes using hinge jig. For long hinges, flip at specified location on jig.

   b. Install hinge on basket
      i. Locate hinge on basket (standard baskets)
         1. centre fore/aft
         2. 0.15" – 0.18" up from bottom edge
      ii. Locate hinge on basket (extra wide baskets)
         1. centre fore/aft
         2. set hinge at 90 degrees (as if lid would be installed) using a small square, locate vertical side at 22.5" from outboard edge.
      iii. Drill #30 through holes in hinge into basket rim. Cleco in place with 1/8 (copper) clecos.
      iv. Drill holes up to #21 through hinge and rim. Replace 1/8 clecos with 5/32 (black) clecos.
      v. Remove hinge and de-burr holes in hinge and basket rim.
      vi. Cleco hinge to basket with 5/32 clecos.
      vii. Install hinge with CherryMax rivets
         1. CR3523-5-02 monel rivets – last 2 rivets in each end
         2. CR3213-5-02 aluminum rivets – all other locations

   c. Install lid on basket
      i. Locate lid on hinge (all baskets)
         1. center fore/aft
         2. 0.15" – 0.18" down from top edge
      ii. Drill #30 through holes in hinge into lid rim. Cleco in place with 1/8 clecos.
      iii. Drill holes up to #21 through hinge and rim. Replace 1/8 clecos with 5/32 clecos.
      iv. Remove hinge and de-burr holes in hinge and lid rim.
      v. Cleco lid to hinge with 5/32 clecos.
      vi. Install hinge with CherryMax rivets
         1. CR3523-5-02 monel rivets – last 2 rivets in each end
         2. CR3213-5-02 aluminum rivets – all other locations

d. Record PO of hinge and rivets on attached material tracking list.

AD 73-04 07

4. Install Handle
   a. Install handle brackets.
      i. Set 84267-01 handle bracket on provisions in hoops, 2 places.
      ii. Install AN3-11A bolt, NAS1149F0363P washer (2), MS21044N3 nut. Two places per bracket, two brackets per basket.
      iii. Torque AN3 bolts to ??.

   b. Install handle
      i. Trim 36278-01R and 36278-01L springs to ensure end of spring does not extend past edge of handle bracket, approximately 1/8". Set springs over bushing of 84261-01 handle assembly.
      ii. Grease two 36275-01 bushings with ??. Insert into bushings of handle assembly.
      iii. Locate handle on basket lid. Insert AN3-12A bolt with NAS1149F0363P through bracket on lid and handle bushing on one end of handle.
      iv. On other end of handle, hook spring over catch rivet on handle assembly and use spring tool to twist spring to catch arm on bracket on lid while inserting AN3-12A bolt with NAS1149F0363P washer through lid bracket and handle bushing.
      v. At first end, remove bolt and repeat step iv.
      vi. Install NAS1149F0363P washer and MS21044N3 nut on both AN3-12A bolts.
      vii. Torque AN3 bolts to ??.

   c. Check handle
      i. Operate handle to ensure handle does not bind and springs hold handle in.
      ii. Snap handle into brackets to ensure handle locks.

   d. Record PO/WO of all parts used in steps above on attached material tracking list.

AD 73-04 07

5. Install lid brace
   a. Locate 36280-01 lid brace on bushing in basket. Ensure brace is on forward end of basket as it will be installed on the helicopter.
   b. On lid end, insert AN970-3 washer into end of lid brace. Insert AN3-15A bolt with NAS1149F0363P washer through AN970-3 washer, lid prop, and lid bushing. Install NAS1149F0363P washer and MS21044N3 nut on bolt.
   c. On basket end, insert AN3-17A bolt with AN970-3 washer through lid prop and basket bushing. Install NAS1149F0363P washer and MS2144N3 nut on bolt.
   d. Ensure brace is seated on lip of bushings before tightening nuts.
   e. Torque AN3 bolts to ??
   f. Record PO/WO of all parts used in steps above on attached material tracking list.

Complete
(initial or SCA #)

6. Final Inspection

   Dual inspection by a different person than assembled the basket.

   a. Check for general condition and correct assembly:
      i. Bolts are tight
      ii. Rivets are installed correctly
      iii. Handle operates correctly
      iv. Lid brace operates correctly
   b. Check that PO/WO numbers have been recorded.

Draft

1. Approving Civil Aviation Authority/Country	2. AUTHORIZED RELEASE CERTIFICATE FORM ONE	3.Form Tracking No.
Transport Canada		2018-0286

4. Organization Name and Address	5. Work Order/Contract/Invoice
AERO Design Ltd. – 9888A Malaspina Road, Powell River, BC, V8A 0G3	PO 11580

6. Item	7. Description	8. Part Number	9. Qty.	10. Serial/Batch No.	11. Status/Work
1.	Basket Assembly	100610-02	1	100602-06 WO 2017-37	New

12. Remarks

Certification data: TCCA STC SH07-56

13a. Certifies that the items identified above were manufactured in conformity to:	~~14a. ☐ CAR 571.10 Maintenance Release~~
☒ Approved design data and are in condition for safe operation. ☐ Non approved design data specified in block 12.	~~☐ Other regulation specified in block 12.~~ ~~Certifies that unless otherwise specified in block 12, the work identified in block 11 and described in block 12, has been performed in compliance with the *Canadian Aviation Regulations*.~~

13b. Signature	13c. Approved Organization Number	~~14b. Signature~~	~~14c. Approved Organization Number~~
AD 73-04 02	AMF 73-04		
13d. Name	**13e. Date (dd/mmm/yyyy)**	**~~14d. Name~~**	**~~14e. Date (dd/mmm/yyyy)~~**
Jeff Clarke - AD02	23 Nov 2018		

Installer Responsibilities

This certificate does not constitute authority to install.

Installers working in accordance with the national regulations of a country other than that specified in block 1 must ensure that their regulations recognize certifications from the country specified.

Statements in blocks 13a or 14a do not constitute installation certification. In all cases, the technical record for the aircraft must contain an installation certification issued in accordance with the applicable national regulations before the aircraft may be flown.

BLACKCOMB HELI COPTERS

2017-37

THIS DRAWING CONTAINS INFORMATION AND DATA WHICH IS PROPRIETARY TO AERO DESIGN LTD. THIS DRAWING OR ANY PORTION THEREOF MAY NOT BE REPRODUCED, COPIED, OR EXPLOITED IN ANY MANNER, NOR USED FOR MANUFACTURING WITHOUT THE WRITTEN CONSENT OF AERO DESIGN LTD. BY ACCEPTING THIS DRAWING FOR REFERENCE, THE RECIPIENT AGREES TO HOLD AERO DESIGN LTD HARMLESS FROM THE USE, OR MISUSE, OF THIS DRAWING OR THE INFORMATION CONTAINED THEREIN.

REV	DESCRIPTION OF CHANGE	INITIALS	DATE
0	INITIAL ISSUE		

NOTES

1. REMOVE ALL BURRS AND BREAK SHARP EDGES.
2. INSTALL RIVETS USING EDGE DISTANCE AND PITCH AS OUTLINED IN AC43.13-1B, PAR 4-58, FIG 4-5 AND FIG 4-6.

⚠3 INSTALL ADDITIONAL HANDLE BRACKETS IN LOCATIONS SHOWN IN ACCORDANCE WITH AERO DESIGN LTD. DRAWING 84239.

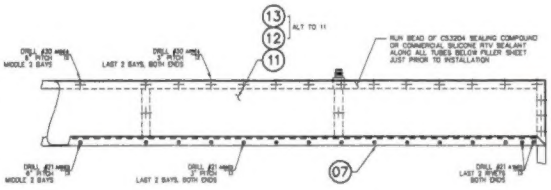

VIEW D

LOOKING DOWN AT INBOARD TOP RIM PRIOR TO INSTALLATION OF LID

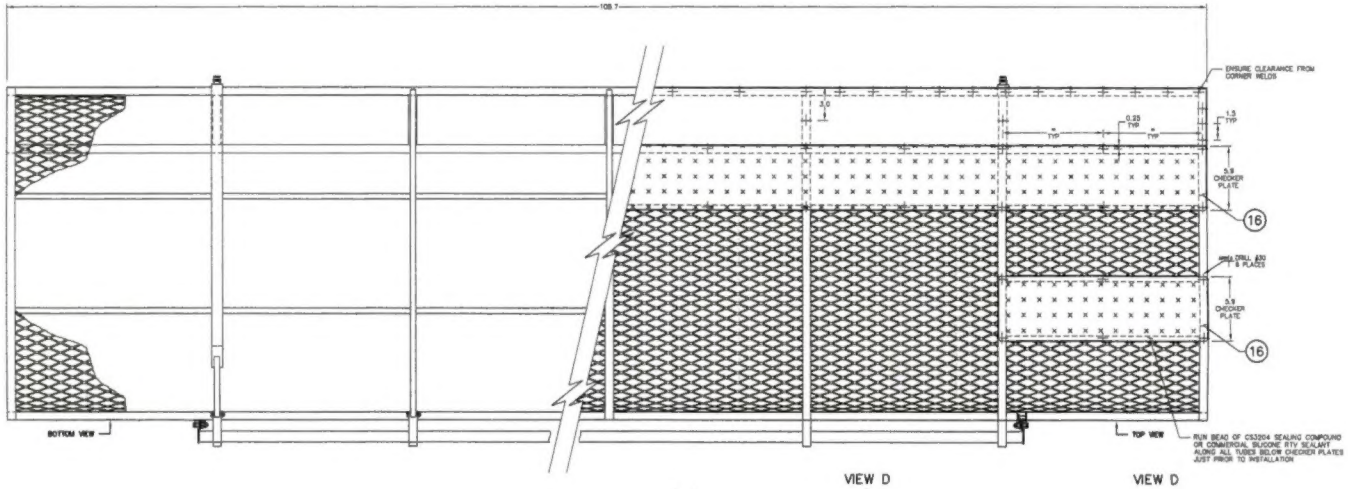

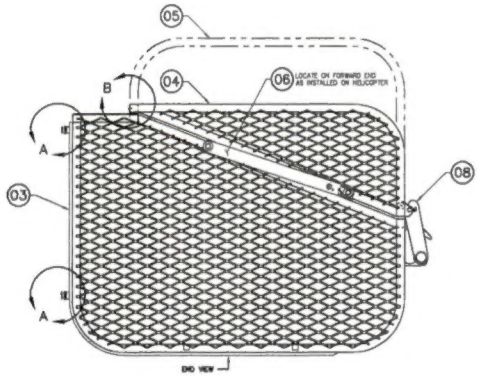

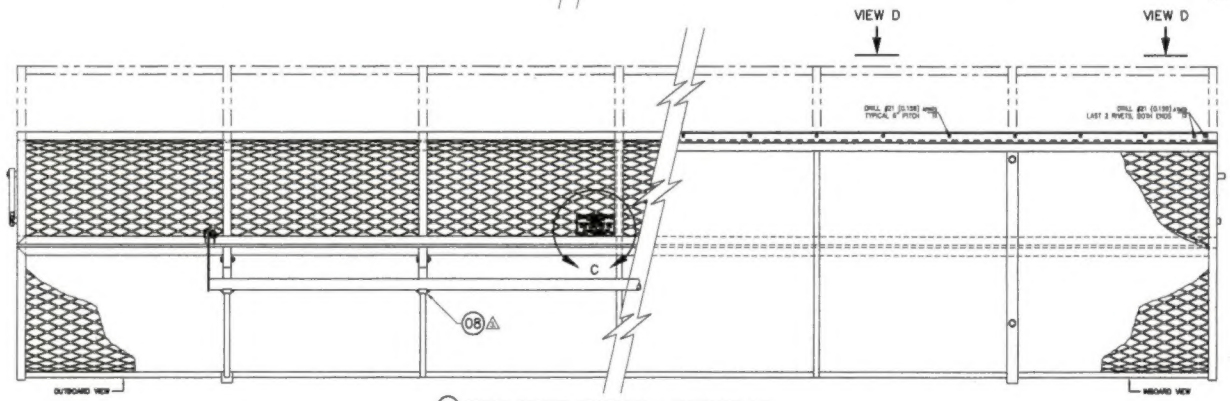

01 CARGO BASKET ASSEMBLY – STANDARD LID

02 CARGO BASKET ASSEMBLY – EXTENDED LID

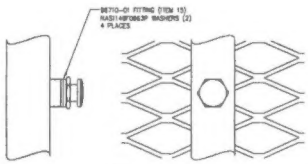

DETAIL A

SCALE 1 : 1

LOOKING AT ATTACHMENT LUGS TYPICAL, 4 PLACES

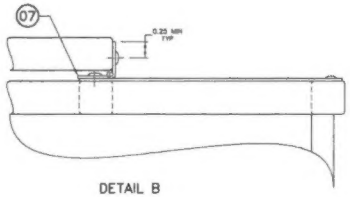

DETAIL B

SCALE 1 : 1

LOOKING AT HINGE

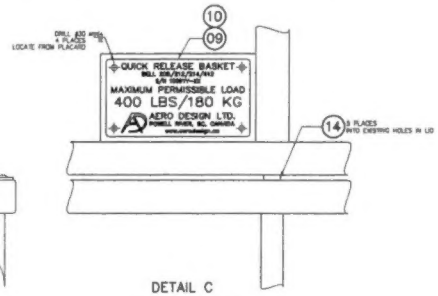

DETAIL C

SCALE 1 : 1

LOOKING AT PLACARD BRACKET

QTY	QTY	PART NO.	ITEM	DESCRIPTION	MATERIAL	MATERIAL SPEC	STOCK SIZE
A/R	A/R	---		SILICONE SEALANT (CLEAR)	COMMERCIAL		
A/R	A/R	CS3204		SEALING COMPOUND	AMS-S-8802C T2 B1/2		
8	8	NAS1149F0863P		WASHER			
A/R	A/R	CR3213-4-02		CHERRYMAX RIVET	ALT: HR3213-6-02		
4	4	CR3523-5-03		CHERRYMAX RIVET	ALT: HR3523-5-03		
4	4	CR3523-5-03		CHERRYMAX RIVET	ALT: HR3523-5-02		
A/R	A/R	CR3213-5-03		CHERRYMAX RIVET	ALT: HR3213-5-03		
A/R	A/R	CR3213-5-03		CHERRYMAX RIVET	ALT: HR3213-5-02		
A/R	A/R	---	16	CHECKER PLATE	3003 ALUMINUM	COMMERCIAL	0.063 SHEET, C-102
4	4	96710-01	15	FITTING	ALT: AMCRA 40086-14		
8	8	46205-14	14	BUMPER			
A/R	A/R	100616-03	13	AFT FILLER SHEET	(ALTERNATE TO 100616-01)		
A/R	A/R	100616-02	12	FORWARD FILLER SHEET	(ALTERNATE TO 100616-01)		
1	1	100616-01	11	FILLER SHEET			
1		100627-02	10	PLACARD (EXTENDED LID)			
	1	100627-01	09	PLACARD (STANDARD LID)			
1	1	84255-01	08	HANDLE BAR INSTALLATION			
1	1	W93000PA1	07	PIANO HINGE			107 LONG
1	1	84240-01	06	BRACE INSTALLATION			
1		100613-01	05	LID ASSEMBLY (EXTENDED)			
	1	100612-01	04	LID ASSEMBLY (STANDARD)			
1	1	100611-01	03	BASKET BODY ASSEMBLY			
		100610-02	02	CARGO BASKET ASSEMBLY – EXTENDED LID			
		100610-01	01	CARGO BASKET ASSEMBLY – STANDARD LID			

LIST OF MATERIALS

APPROVALS		DATE
DRAWN:	JEFF CLARKE	28 NOV 2014
CHECKED:	JASON REKVE	27 NOV 2014

UNLESS OTHERWISE SPECIFIED DIMENSIONS ARE IN INCHES. TOLERANCES ON:

DECIMALS	ANGLES
X.XXX ±0.010	±1/2°
X.XX ±0.03	
X.X ±0.1	

AERO DESIGN LTD.
6988A KALAMUNA ROAD
POWELL RIVER, BC, CANADA, V8A 6G3
TEL: 604.485.8074
www.aerodesign.ca

BELL 205, 212, 214, 412 SERIES
QUICK RELEASE MEGA CARGO BASKET
BASKET BODY ASSEMBLY

SCALE 1 : 4	DWG. SIZE	DWG. NO.	REV.
SHEET 1 OF 1	A0	100610	0

THIS DRAWING CONTAINS INFORMATION AND DATA WHICH IS PROPRIETARY TO AERO DESIGN LTD. THIS DRAWING, OR ANY PORTION THEREOF, MAY NOT BE REPRODUCED, COPIED, OR DUPLICATED IN ANY MANNER, NOR USED FOR MANUFACTURING WITHOUT THE WRITTEN CONSENT OF AERO DESIGN LTD. BY ACCEPTING THIS DRAWING FOR REFERENCE, THE RECIPIENT AGREES TO HOLD AERO DESIGN LTD. HARMLESS FROM THE USE, OR MISUSE, OF THIS DRAWING OR THE INFORMATION CONTAINED THEREON.

REV.	DESCRIPTION OF CHANGE	INITIALS	DATE
0	INITIAL ISSUE – CREATED FROM 36255	BJC	NOV 03/09
1	HANDLE END BRACKETS FLIPPED	BJC	SEPT 19/11
2	TITLE BLOCK UPDATED; ADD NOTE 2; HARDWARE UPDATED	BJC	MAR 13/14

NOTES:

1. THIS DRAWING IS AN ALTERNATE CONFIGURATION FOR THE HANDLE INSTALLATION SHOWN ON DRAWING 36255.
2. GREASE BUSHING (ITEM 04) USING MOBILGREASE 28 OR EQUIVALENT PRIOR TO INSTALLATION.

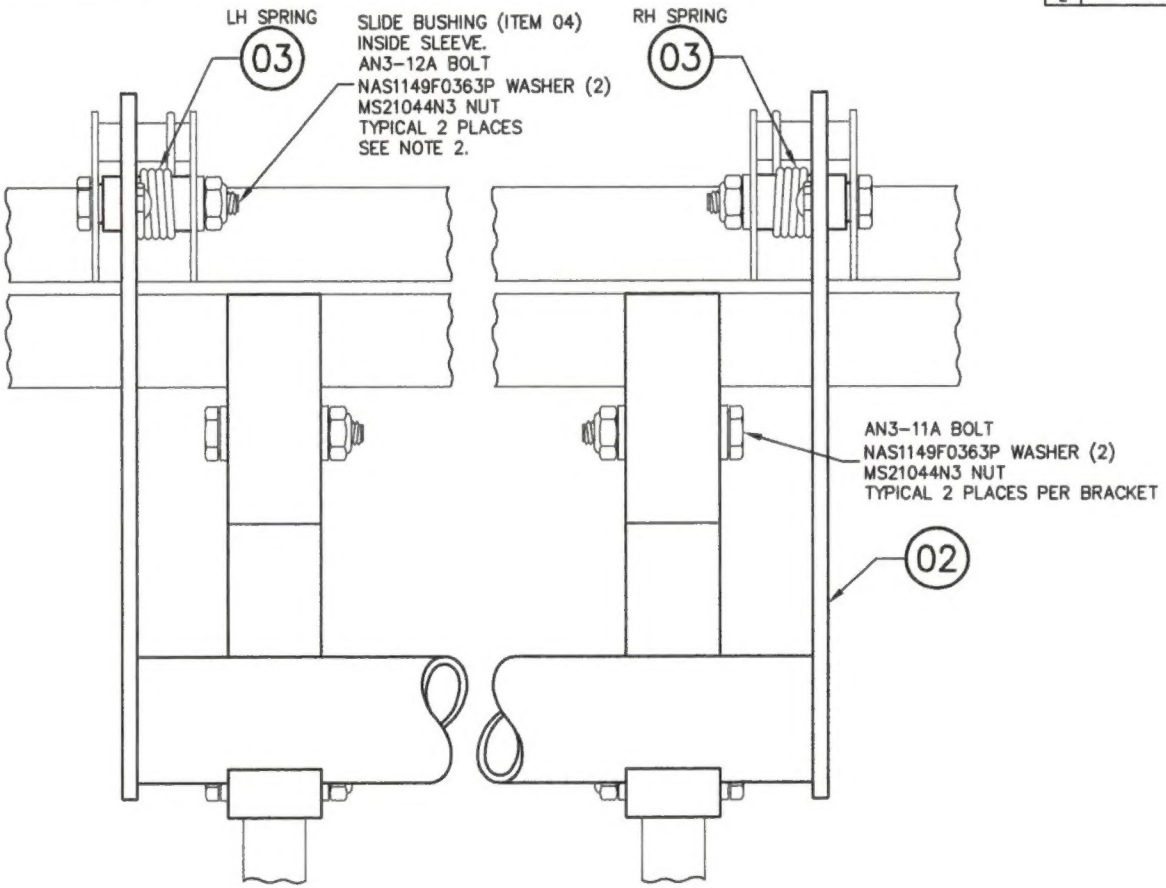

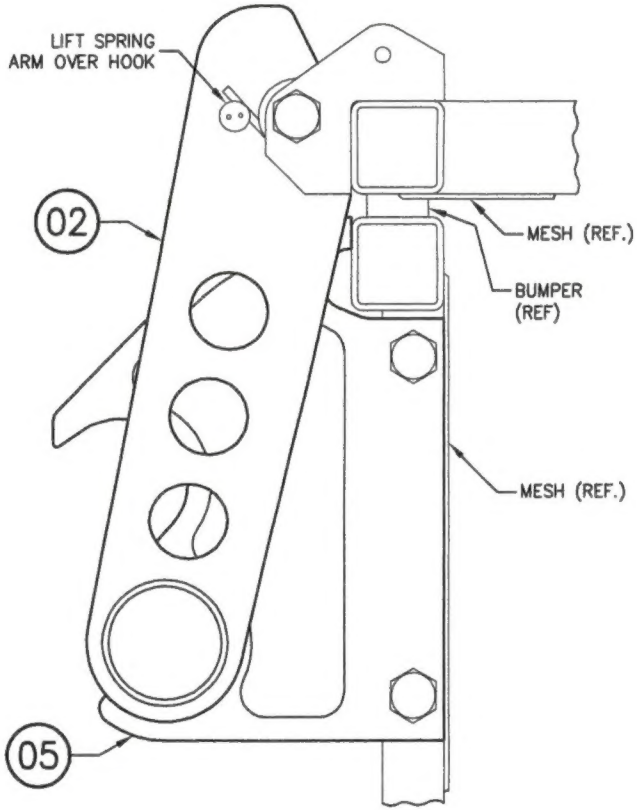

01 HANDLE INSTALLATION

01	PART NO.	ITEM	DESCRIPTION	MATERIAL
A/R	MOBILGREASE 28		GREASE	MIL-PRF-81322F
4	AN3-11A		BOLT	
2	AN3-12A		BOLT	
10	NAS1149F0363P		WASHER	
6	MS21044N3		NUT	
2	84267-01	05	BRACKET	
2	36275-01	04	BUSHING	
2	36278-01	03	SPRING (1 LH, 1 RH)	
1	84261-01	02	HANDLE BAR ASSEMBLY	
	84255-01	01	HANDLE INSTALLATION	

QTY. — LIST OF MATERIALS

APPROVALS		DATE
DRAWN:	JEFF CLARKE	03 NOV 2009
CHECKED:	E. BURGOIN	

UNLESS OTHERWISE SPECIFIED DIMENSIONS ARE IN INCHES.
TOLERANCES ON:

DECIMALS		ANGLES
X.XXX	±0.010	±1/2°
X.XX	±0.03	
X.X	±0.1	

AERO DESIGN LTD.
9888A MALASPINA ROAD
POWELL RIVER, BC, CANADA, V8A 0G3
TEL: 604.483.2376 www.aerodesign.ca

HELICOPTER CARGO BASKET
HANDLE BAR INSTALLATION

SCALE 1 : 1	DWG. SIZE	DWG. NO.	REV.
SHEET 1 OF 1	A3	84255	2

THIS DRAWING CONTAINS INFORMATION AND DATA WHICH IS PROPRIETARY TO AERO DESIGN LTD. THIS DRAWING, OR ANY PORTION THEREOF, MAY NOT BE REPRODUCED, COPIED, OR DUPLICATED IN ANY MANNER, NOR USED FOR MANUFACTURING WITHOUT THE WRITTEN CONSENT OF AERO DESIGN LTD. BY ACCEPTING THIS DRAWING FOR REFERENCE, THE RECIPIENT AGREES TO HOLD AERO DESIGN LTD. HARMLESS FROM THE USE, OR MISUSE, OF THIS DRAWING OR THE INFORMATION CONTAINED THEREON.

REV.	DESCRIPTION OF CHANGE	INITIALS	DATE
0	INITIAL ISSUE	*	*

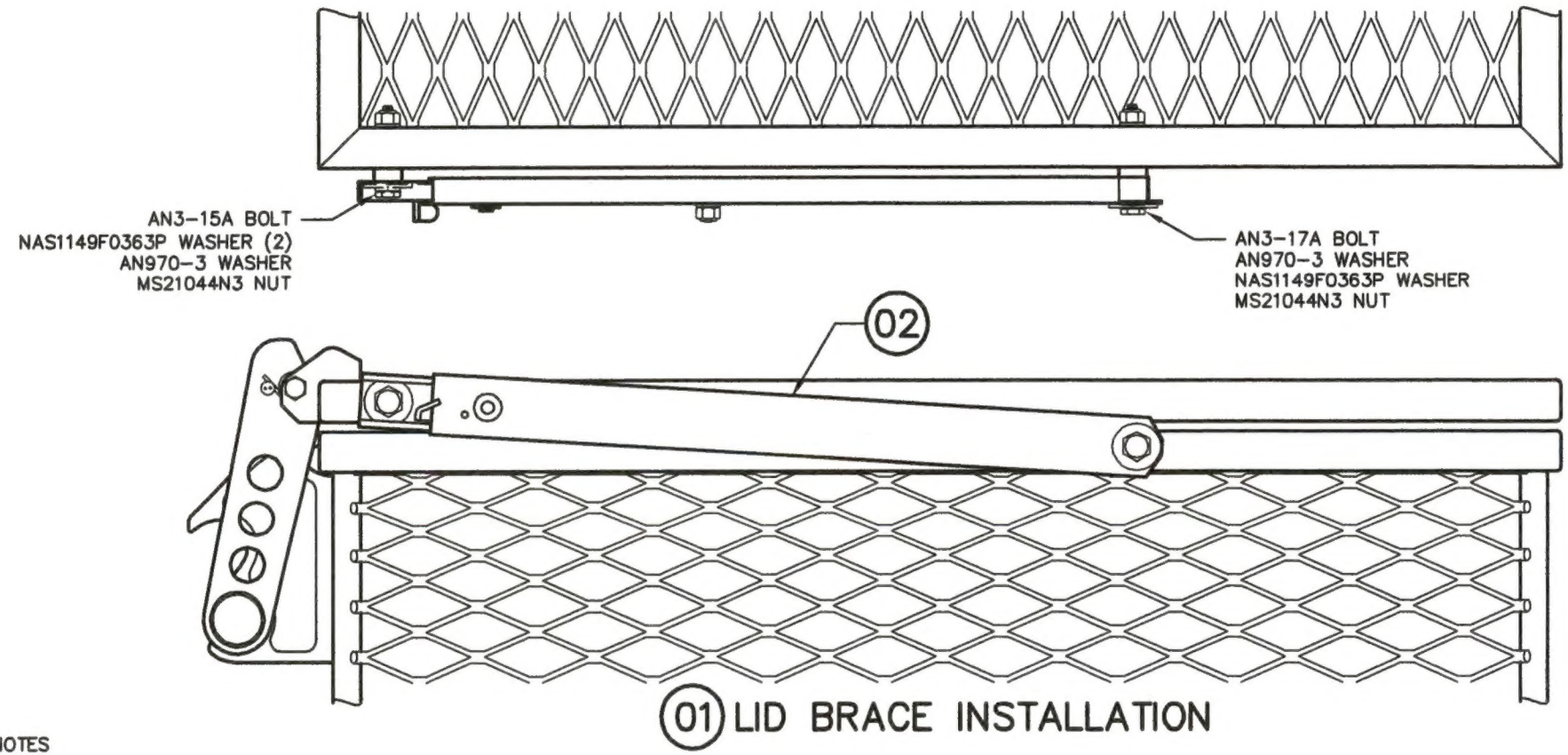

01 LID BRACE INSTALLATION

NOTES

1. THIS DRAWING APPLIES TO ALL AERO DESIGN LTD. CARGO BASKET ASSEMBLIES.
   LID PROP IS TO BE INSTALLED ON THE FORWARD END OF THE BASKET AS INSTALLED ON THE HELICOPTER.

QTY.	PART NO.	ITEM	DESCRIPTION
2	MS21044N3		NUT
3	NAS1149F0363P		WASHER
2	AN970-3		WASHER
1	AN3-17A		BOLT
1	AN3-15A		BOLT
1	36280-01	02	LID BRACE ASSEMBLY
	84240-01	01	LID BRACE INSTALLATION

LIST OF MATERIALS

APPROVALS		DATE
DRAWN:	JEFF CLARKE	21 MAY 2014
CHECKED:	JASON REKVE	21 MAY 2014

UNLESS OTHERWISE SPECIFIED DIMENSIONS ARE IN INCHES.
TOLERANCES ON:

DECIMALS		ANGLES
X.XXX	±0.010	±1/2°
X.XX	±0.03	
X.X	±0.1	

AERO DESIGN LTD.
9888A MALASPINA ROAD
POWELL RIVER, BC, CANADA, V8A 0G3
TEL: 604.483.2376 www.aerodesign.ca

HELICOPTER CARGO BASKET
ALL MODELS
LID BRACE INSTALLATION

NOT TO SCALE	DWG. SIZE	DWG. NO.	REV.
SHEET 1 OF 1	A4	84240	0